机能符号/Functional Symbol

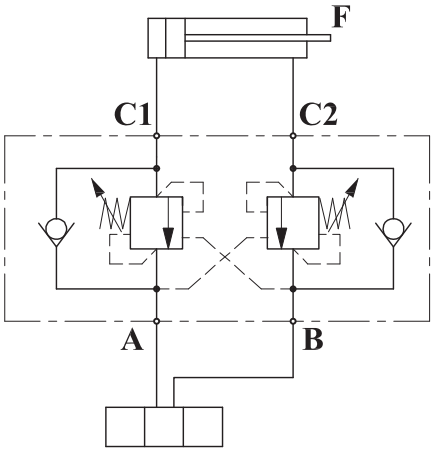

技术参数/Technical Data

- Matching directional valve neutral function A.B-T.
  建议应用Y型中位机能的换向阀
- Operating temperature:+40℃~+70℃
  工作温度：+40℃~+70℃
- Working medium:ISO VG 10 to 68 according to DIN ISO 3448
  工作介质：符合DIN ISO 3448标准，范围在ISO VG 10-68
- Material: Steel, zinc-plated
  阀体材质：镀锌钢体
- Sealing Material: Nitrile Rubber
  密封材质：丁腈橡胶

主要尺寸/Dimension

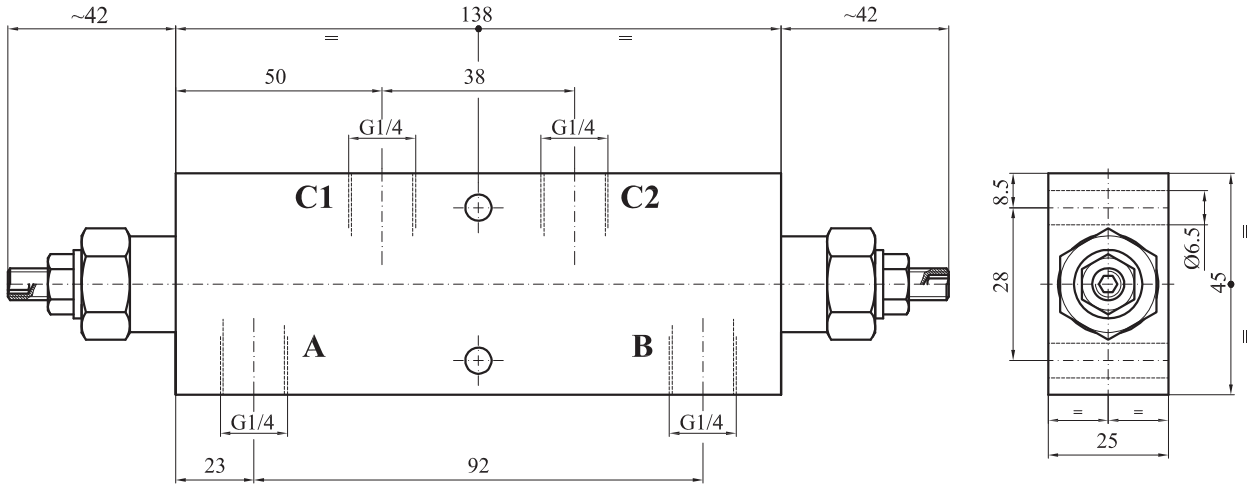

订货代码/Ordering Code

代　号 Ordering Code	先导比例 Pilot Ratio	压力调节范围 Adjustance Pressure Range (bar)	标准设定 Standard Setting (bar)	压力递进 Pressure Increase (bar)/r	流量范围 Flow Range (l/min)	最大压力 Max. Pressure (bar)	Y	重量 Weight (kg)
04A026122.00	4.1:1	100-350	300	180	1-30	500	G1/4	1.1